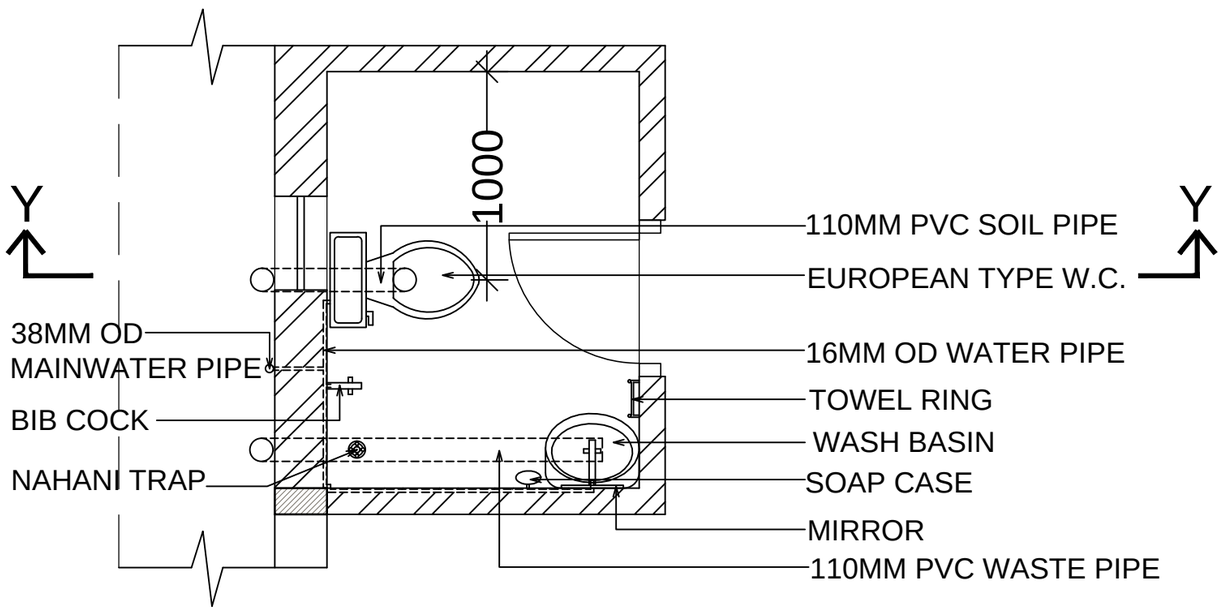

TOILET DETAIL

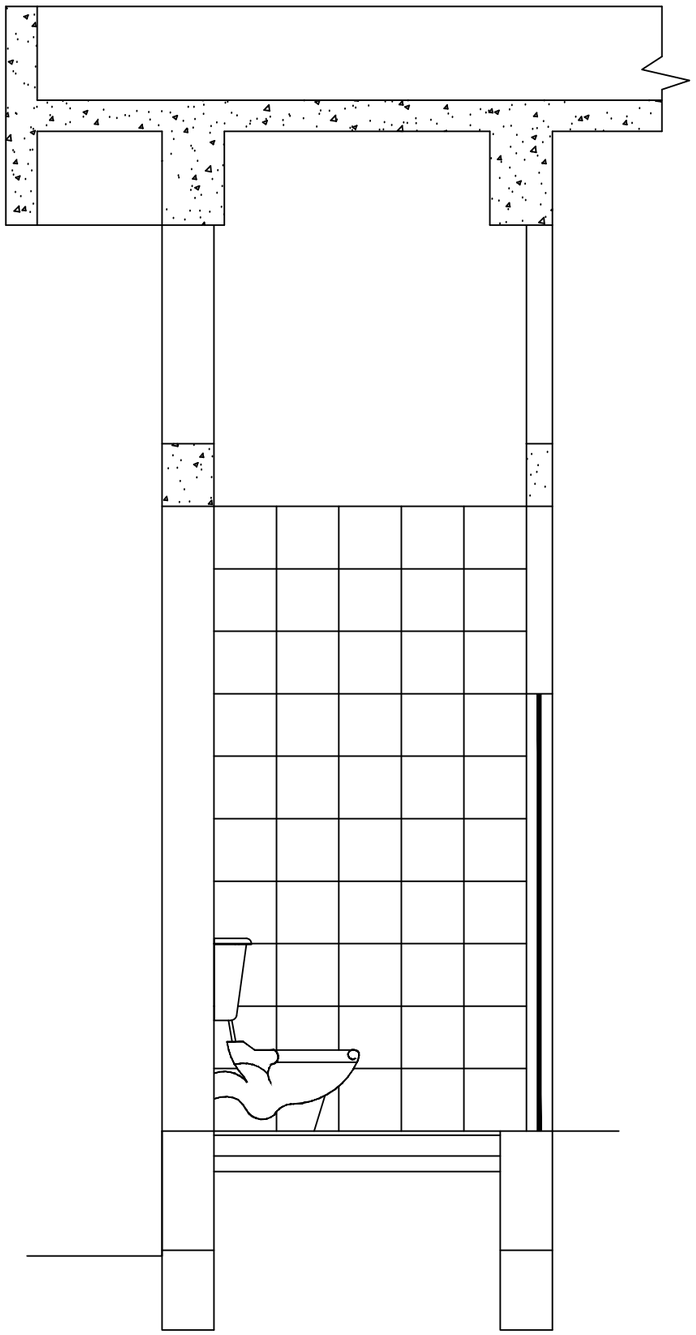

SECTION AT Y-Y

THIS DRAWING IS A COPYRIGHT.
CONTENTS OF THE DRAWING OR PART THEREOF MAY NOT BE USED OR REPRODUCED WITHOUT THE PERMISSION OF RAJKHOWAS AARCHI
M.D ROAD,CHANDMARI, GUWAHATI.

NOTES

HT-PANEL SIZE : 2.5M X 2M X 1.5M (LXBXH)
LT-PANEL SIZE : 3.2M X 0.6M X 1.5M (LXBXH)
MFP S.T.L.T SIZE : 0.5M X 0.3M X 0.5M (LXBXH)

NOTE : SIZES OF THE PANELS ARE TENTATIVE. AS PER REQUIREMENT IT MAY CHANGE.

S.NO.	REVISIONS	DATE

REVISIONS

CLIENT

BRAHMAPUTRA CRACKER AND POLYMER LIMITED

PROJECT

PROPOSED SUBSTATION AT CISF TOWNSHIP, LEPETKATA,DIBRUGARH.

SCALE : 1:100	JOB NO	15/GU/2009
	DEALT BY	
	CHECKED BY	

CLIENT'S SIGN

ARCHITECT'S SIGN

CONSULTANT

ARCHITECTS, ENGINEERS,
VALUERS & PLANNERS
M.D. ROAD, CHANDMARI
GUWAHATI-781003
RAJKHOWAS AARCHI

DRAWING TITLE

TOILET DETAIL

DRAWING NO.

RAA / CISF / SUBSTATION/T/ AR-06